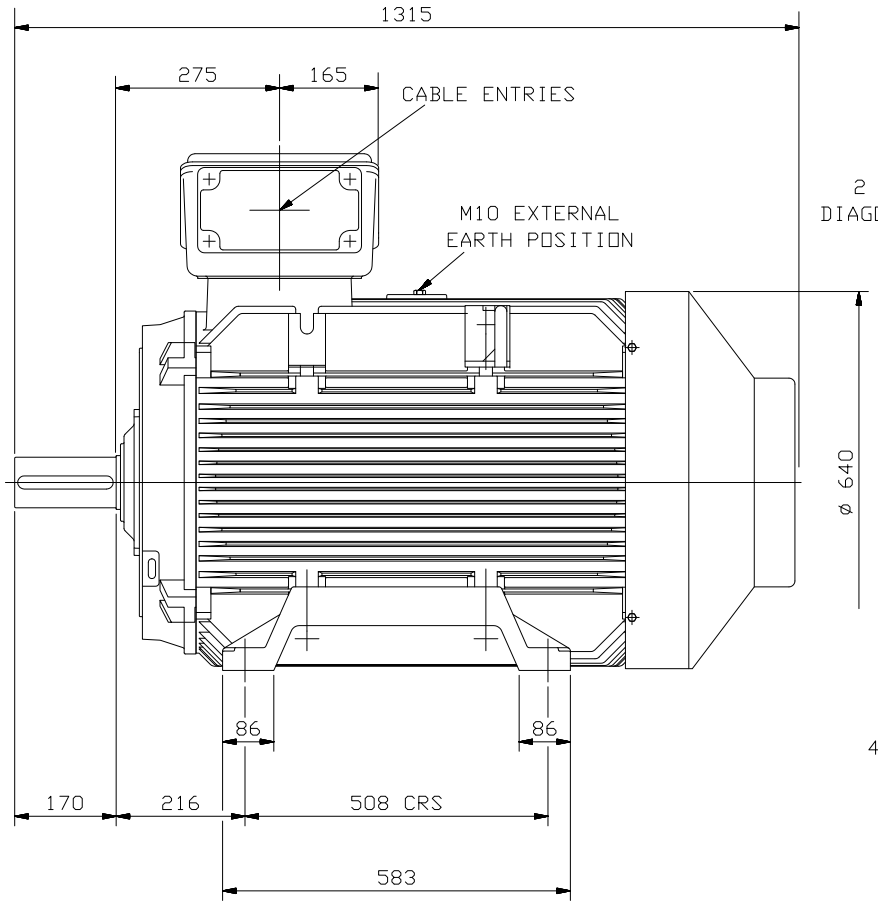

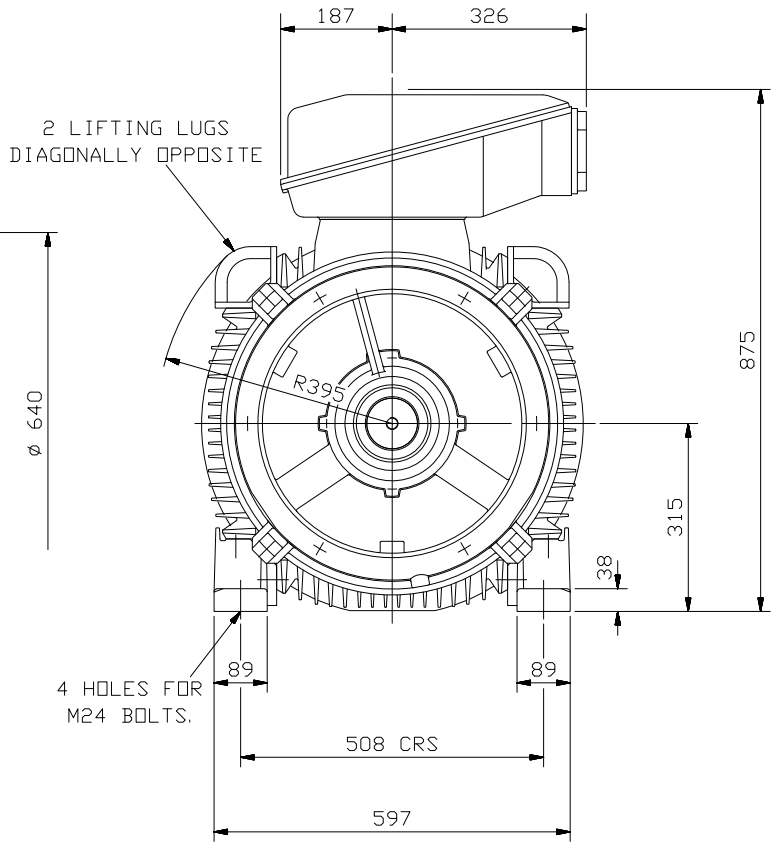

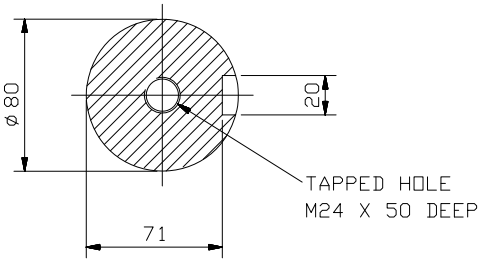

SECTION THROUGH
SHAFT EXTENSION
(SCALE 1: 2)

NOTE: -
TERMINAL BOX CAN BE SIDE MOUNTED (LEFT OR RIGHT) BY REFITTING FEET 90° IN APPROPRIATE DIRECTION.
CABLE ENTRY CAN BE SUPPLIED IN ANY ONE OF FOUR POSITIONS AT 90° INTERVALS.

CUSTOMER		
ORDER No.		
SERIAL No.		
FRAME SIZE		
kW	RPM.	
Hz	PHASE 3	
VOLTS	POLES	
BRGS.	DE.	NDE.
MOTOR NETT. WT.		Kg.
INSULATION CLASS		
TEMPERATURE RISE	°C	
DESIGN AMBIENT TEMPERATURE		°C
HEATER WATTS & VOLTS	WATTS,	VOLTS
REMARKS		

ALL DIMENSIONS IN MILLIMETRES

FIRST ANGLE PROJECTION

BROOK CROMPTON

OUTLINE DIMENSIONS OF STANDARD FOOT MOUNTED METRIC A.C. MOTOR
TOTALLY ENCLOSED FAN VENTILATED.
FRAME SIZE :- WP-DF315L (4 POLE UP)

DRAWN		
CHECKED		
APPROVED		

REVISION: DATE